VAISALA

Vaisala K-PATENTS® SeedMaster SM-3

For Multiparameter Sugar Crystallization Monitoring and Automatic Seeding

SB: SM-3/6
January 2020

SUGAR CRYSTALLIZATION

Crystallization is a very important part of sugar manufacturing. Crystallization has a major effect on product quality, yield and cost of production. Modern control of crystallization should rely on reliable on-line measurement of those parameters that are critical in controlling the process by a local operator (manual control), or by an advanced automatic process control system.

SUPERSATURATION

Supersaturation is the driving force of crystallization. Crystal growth (speed of crystallization) depends on this parameter. High supersaturation means faster crystal growth and vice-versa. It has also been proven that excessive supersaturation results in poor crystal quality and formation of fines and conglomerates. These need to be melted, concentrated, recycled and crystallized again, resulting in:

- waste of time and energy,
- decreased effective yield of produced sugar, and
- increased use of water and cost of production.

The illustrations of sugar crystals below show the presence of fines and conglomerates.

Large amount of fines

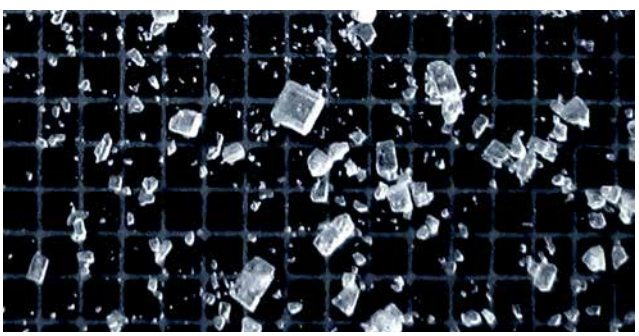

Conglomerates

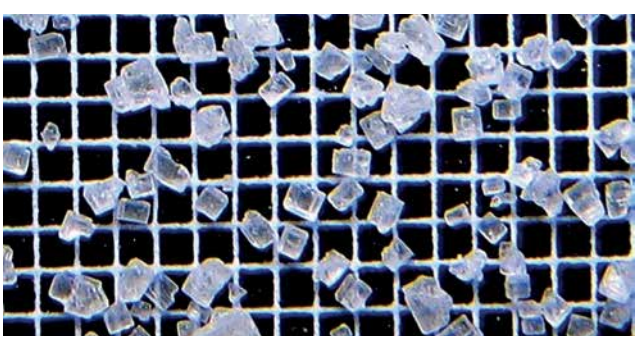

Supersaturation is defined as the amount of sugar dissolved divided by the amount of sugar required for saturation in the same amount of water at the same temperature. Supersaturation can take place only if this ratio is larger than 1.0 (saturation). Supersaturation is a multivariable function of the liquid phase (mother liquor) parameters and it should be calculated taking into account all of them:

SUPERSATURATION = f (C, P, T, m, b, c)

where:
C : syrup / mother liquor concentration (%)
P : syrup / mother liquor purity (%)
T : temperature C°
m, b, c : syrup quality parameters

Therefore, to be able to calculate supersaturation, concentration of the mother liquor should be measured selectively in-line and undisturbed by the crystals and vapor bubbles present in the massecuite.

Conventional sensors used in crystallization control to determine e.g. conductivity, consistency, massecuite density or solids content (nuclear or microwave, radio frequency (RF)) and liquor concentration (refractometer) provide data on a single massecuite parameter only. However, none of these parameters can substitute supersaturation in advanced control. Furthermore, most of these sensors (except the refractometer) provide indirect, approximate data correlated to crystal content. Advanced control of sugar crystallization requires accurate in-line, real-time monitoring of supersaturation over the complete strike of crystallization. In addition to supersaturation also other critical massecuite parameters need to be monitored in real time.

Critical supersaturation parameters to start nucleation

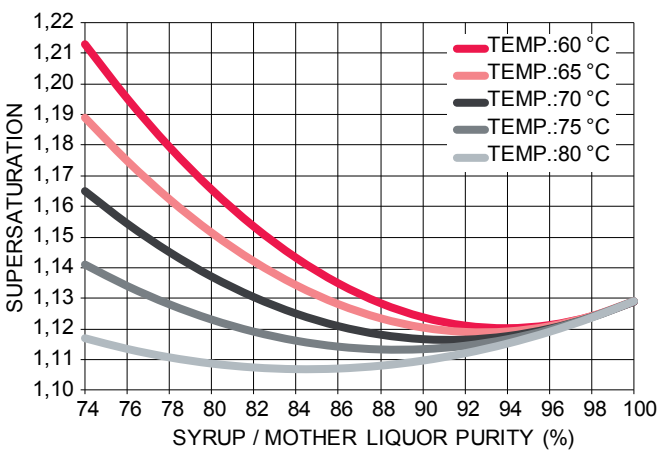

Source: M.Saska: Boiling point elevation of technical sugarcane solutions and its use in automatic pan boiling.
International Sugar Journal 2002, VOL.104, No.:1247

PERFORMANCE OVERVIEW

MULTIPARAMETER CRYSTALLIZATION TRANSMITTER AND SEEDING DEVICE

SeedMaster SM-3 is a unique third generation crystallization transmitter and seeding device to be used with the the Process Refractometer. The SM-3 allows for accurate in-line and real-time monitoring of supersaturation and crystal content over the complete process of crystallization, and implementation and control of automatic or manual seeding. The SM-3 can be connected to one or two Process Refractometer sensors and to one or two crystallizers.

The SeedMaster SM-3 provides the following tasks:

1. Electronic data capture on massecuite parameters.
2. On-line calculation and transmission of massecuite parameters for the advanced control of sugar crystallization with control system.
3. Organization and storage of strike history data archive.
4. Advanced communication with the control system.
5. Automatic seeding of the vacuum pans.
6. Serves as user interface for the pan and control system operators.

SEEDMASTER SM-3 INPUTS

Supersaturation is calculated on-line taking into account all parameters of the supersaturation function. Therefore, the use of the following three (3) on-line data inputs C, T and D or S is mandatory, while the use of on-line data on level L is highly recommended:

C : syrup / mother liquor concentration (%)
T : temperature C°/F°
D : massecuite density (kg/m^3), or
S : massecuite solids content (%)
L : massecuite level (%)

Laboratory data on certain feed syrup parameters are also needed.

SOURCES OF ON-LINE DATA INPUT SIGNALS:

Required

C : syrup / mother liquor concentration (%): the Process Refractometer
T : temperature: the Process Refractometer

Selectable:

D : massecuite density: nuclear or microwave density transmitter, or
S : massecuite solids content: nuclear or microwave transmitter

Advised:

L: massecuite level transmitter

SEEDMASTER SM-3 OUTPUTS

Measured or calculated data:

SeedMaster SM-3 provides real-time the following six (6) massecuite parameters per each crystallizer:

1. SUPERSATURATION ( )
2. MASSECUITE DENSITY (kg/m^3)
3. MASSECUITE SOLIDS CONTENT (%)
4. CRYSTAL CONTENT (% by vol.)
5. MOTHER LIQUOR PURITY (%)
6. MEAN CRYSTAL SIZE (mm)

Additional outputs:

If the Process Refractometer(s) or density transmitters are connected to the SeedMaster SM-3, the following data can be shown as outputs:

7. MOTHER LIQUOR CONCENTRATION (%)
8. TEMPERATURE C°/F°
9. MASSECUITE LEVEL (%, option)

Product data:

Mean crystal size (if full seeding is practised), weight of crystals per strike, crystal yield and strike history archive.

MODBUS COMMUNICATION

The measured and calculated data, parameters and digital (ON/OFF) data can be transmitted both ways between the SeedMaster SM-3 and a computer or control system. The communication is based on the MODBUS/TCP/IP client/server communication protocol between the devices on the Ethernet TCP/IP network. The SeedMaster SM-3 plays as a server, takes requests and data from peripheral devices (e.g. the other measuring devices, i.e. clients) and processes the information and sends its output to the control system using the MODBUS.

SEEDMASTER SM-3 I/O UNIT

The SM-3 can also be equipped with an optional SM-3 I/O unit that handles analog standard current inputs and outputs and ON/OFF digital inputs and outputs in case the process I/O data are not handled by the control system. The data transmission between the SM-3 and SM-3 I/O unit is based on digital communication.

Process I/O specifications:

Analog inputs:	4	Digital inputs:	6
Analog outputs:	4	Digital outputs:	2

SeedMaster SM-3 I/O Unit

STANDARD SYSTEMS

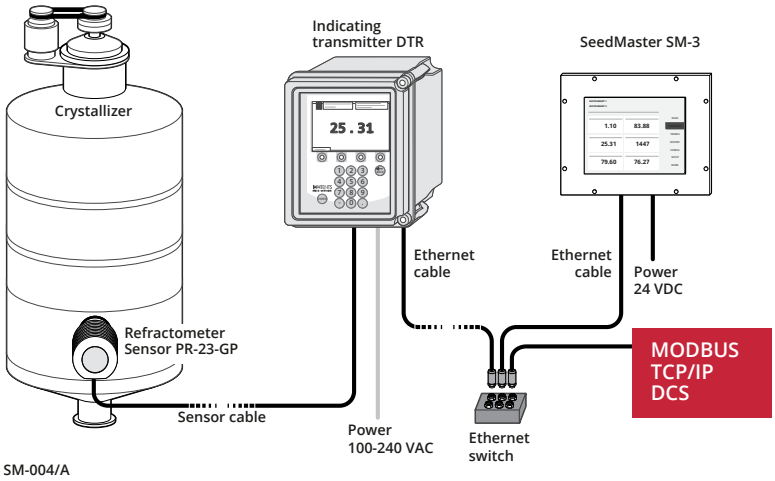

SM-004/A

VAISALA K-PATENTS® PROCESS REFRACTOMETER AND SEEDMASTER SM-3

The SeedMaster 3 system with Refractometer, Interconnecting cables, Ethernet switch and SeedMaster SM-3.

The communication is:

- Refractometer to SM3: UDP/IP
- Control system to/from SM-3: MODBUS TCP/IP

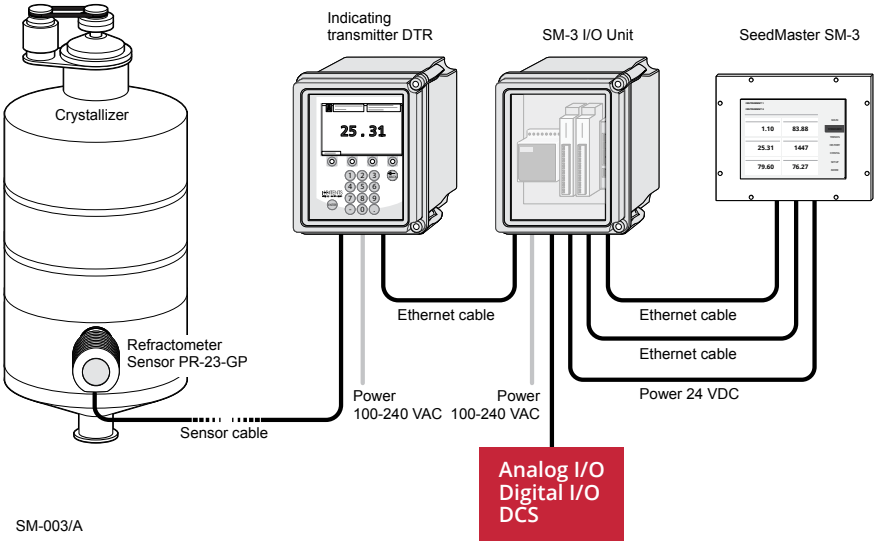

SM-003/A

PROCESS REFRACTOMETER, SM-3 I/0 UNIT AND SEEDMASTER SM-3

A fully equipped SeedMaster 3 system with Refractometer, Interconnecting cables, SM-3 IO Unit and SeedMaster SM-3.

The communication is:

- Refractometer to SM3: UDP/IP
- Analog/Digital I/O: SM-3 I/O Unit
- Control system to/from SM-3: MODBUS TCP/IP

PRISM WASH

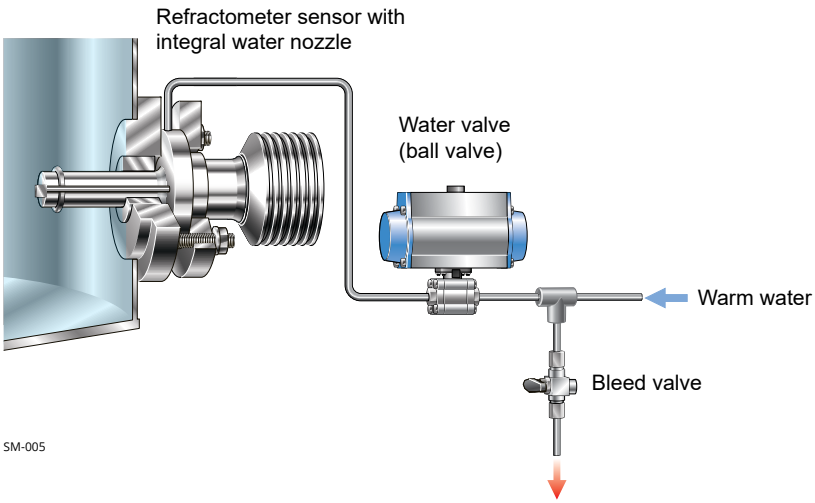

SM-005

PRISM WASH SYSTEM WITH WARM WATER

We offer an integral prism wash system to avoid sugar crystals' deposit or scaling on the prism surface. The components of the water wash system are an integral water nozzle mounted at the refractometer sensor head, a warm feed water source (hot condensate), and an indicating transmitter with built-in relays. The relays drive the water valve and they can be configured to control the prism wash cycle.

The temperature of prism wash water should always be higher than the process temperature to avoid crystallization and to ensure good washing result.

DISPLAYS

Different SeedMaster SM-3 displays provide in-line real-time information of one or two crystallizers and access to the SeedMaster configuration modes.

Standard display showing six (6) calculated massequite parameters

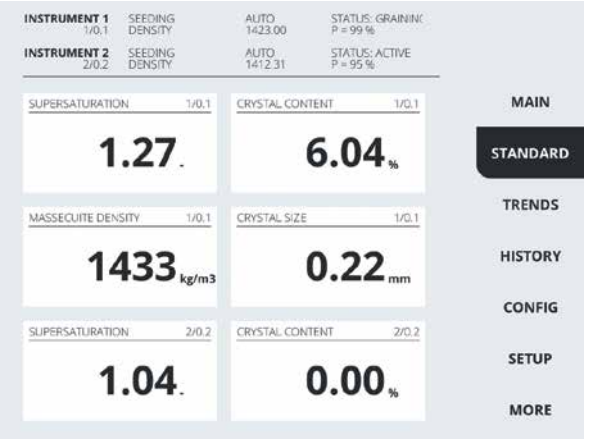

Main display showing data on two crystallizers

Strike history showing trend and data archive

Configuration of I/O data

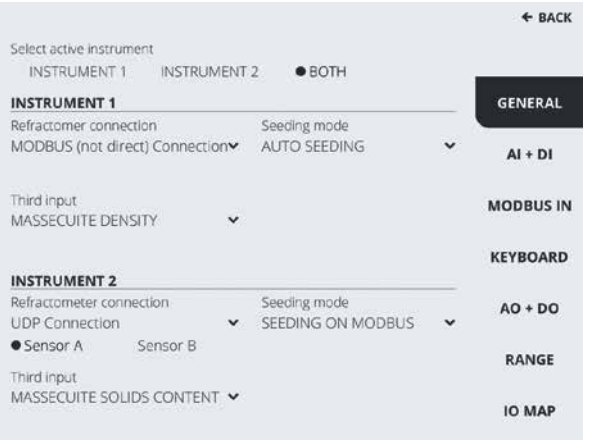

Trends

Configuration of communication

SPECIFICATIONS

SEEDMASTER SM-3	On-line calculation, display and transmission of up to nine (9) massecuite parameters during sugar crystallization for up to two (2) vacuum pans simultaneously. Automatic seeding of vacuum pans based on calculated supersaturation or selectable density seeding set-point. Electronic data capture of measured and calculated data for the last 100 strikes; display of strikes' history trends.
Display and keypad:	10" color touch screen display 2024x768, 4-wire resistive; Wall, table-top and panel mount.
Power:	+24 VDC +/-10%, Max. 8.5W.
Electrical classification:	Unclassified, ordinary locations.
Connections:	1xM12-4pin, D-coded, F (External Ethernet); 1xM12-8pin, A-coded, F (System); 1xM12-4pin, A-coded, M (24 VCD, (mA))
Input/outputs:	Power, Ethernet (Sensor and external)
Dimensions:	Height: 242 mm; width: 312 mm; depth: 49 mm
Enclosure:	Aluminum enclosure for control room conditions; IP65, NEMA 4 protection.
SeedMaster SM-3 weight:	5.4 kg (11 lbs)
PROCESS REFRACTOMETER MODEL	Vaisala K-PATENTS® Process Refractometer PR-23-GP
Sensor mounting:	Via flange connection and Counter flange adapter -AP for vacuum pan installations.
Sensor process connection:	ANSI-flange 150 lbs, 3 inch, insertion lenght 130 mm/DIN-flange 2656, PN25 DN80, insertion lenght 130mm/JIS-flange 10k 80A, Insertion lenght 130 mm.
INDICATING TRANSMITTER	DTR: Connectivity for one or two refractometer sensors; two built-in signal relays; polycarbonate enclosure, IP66 NEMA 4X protection.
Current output:	Isolated 4-20 mA, max. load 1000 Ohm, galvanic isolation 1000 VDC or AC (peak), hold function during prism wash.
Power:	AC input 100-240 VAC/50-60 Hz
Remote and Ethernet connections	10/100BaseT Ethernet, web server for configuration and diagnostics, Modbus TCP/IP Protocol connection for data acquisition.
PRISM WASH	Integral pressurized water nozzle -WN mounted at the refractometer sensor head; Power relay unit, Indicating transmitter with built-in relays.
SM-3 I/O UNIT	For digital transmission and handling of analog standard current inputs and outputs and ON/OFF digital inputs and outputs; Polycarbonate enclosure, IP66 NEMA 4X protection.
Power:	AC input 100-240 VAC/50-60 Hz
INTERCONNECTING CABLES	Standard length 10 m. Interconnecting cable length is field-adjustable with Platform 4 Cable extender for up to 100 m.
SERVICES	To ensure continuous support before and after purchase of our products, we offer local application consultation, training, maintenance and support expertise via our authorized sales representative network. Please refer to www.kpatents.com to contact your nearest representative.

SeedMaster SM-3

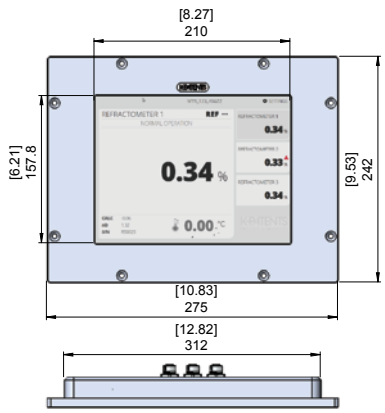

Sensor PR-23-GP with Counter adapter -AP

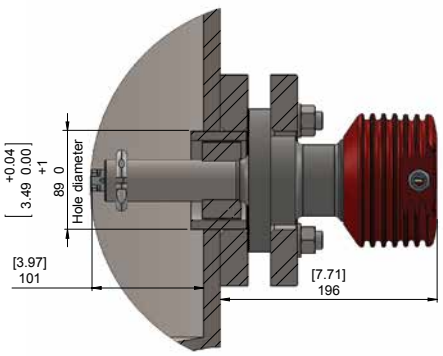

Indicating transmitter DTR and SM-3 I/O Unit

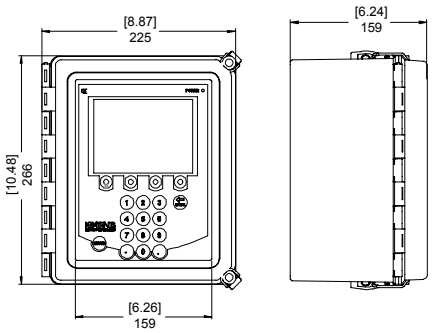

We reserve right to technical alterations.

VAISALA

www.vaisala.com

Please contact us at
www.vaisala.com/requestinfo